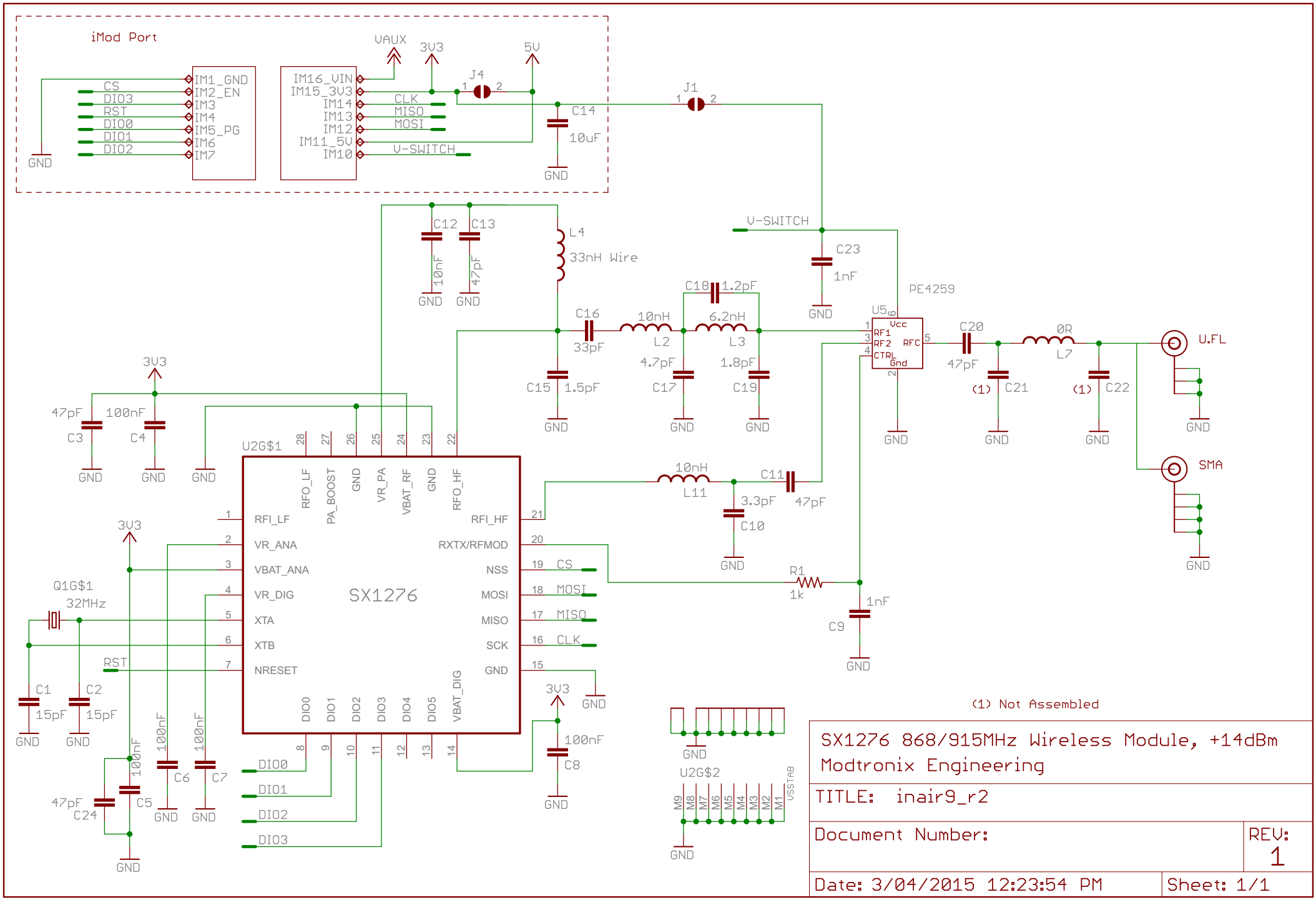

(1) Not Assembled

SX1276 868/915MHz Wireless Module, +14dBm
Modtronix Engineering

TITLE: inair9_r2

Document Number:

REV: 1

Date: 3/04/2015 12:23:54 PM

Sheet: 1/1